DS-2CD2021G1-IDW1
2 MP IR Fixed Network Bullet Camera

Key Features

- 1/2.8" Progressive Scan CMOS
- 1920 × 1080 @30fps
- 2.8/4 mm fixed lens
- Wi-Fi Connection
- H.265+, H.265, H.264+, H.264
- 3D Digital Noise Reduction
- Audio I/O: 1 built-in mic, mono sound
- IP66

Specifications

Camera	
Image Sensor	1/2.8" Progressive Scan CMOS
Min. Illumination	Color: 0.01 Lux @(F1.2; AGC ON), 0.028 Lux @(F2.0; AGC ON)
Shutter Speed	1/3 s to 1/100,000 s
Slow Shutter	Yes
Auto-Iris	No
Day & Night	IR Cut Filter
Digital Noise Reduction	3D DNR
Wide Dynamic Range	DWDR
Axis Adjustment	Pan: 0° to 360°, tilt: 0° to 90°, rotate: 0° to 360°
Lens	
Focal Length	2.8/4 mm
Aperture	F2.0
Focus	No
FOV	2.8 mm, horizontal FOV: 114°, vertical FOV: 62°, diagonal FOV: 135° 4 mm, horizontal field of view: 86°, vertical FOV: 46°, diagonal FOV: 102°
Lens Mount	M12
IR	
IR Range	Up to 30 m
Wavelength	850nm
Compression Standard	
Video Compression	Main stream: H.265/H.264 Sub-stream: H.265/H.264/MJPEG
H.264 Type	Baseline Profile/Main Profile/High Profile
H.264+	Main stream supports
H.265 Type	Main Profile
H.265+	Main stream supports
Audio Compression	G.711/G.722.1/G.726/MP2L2/PCM
Audio Bit Rate	64Kbps(G.711)/16Kbps(G.722.1)/16Kbps(G.726)/32-192Kbps(MP2L2)
Video Bit Rate	32 Kbps to 8Mbps
Audio Sampling Rate	8 kHz/16 kHz/32 kHz/44.1 kHz/48 kHz
Smart Feature-set	
Region of Interest	Support 1 fixed region for main stream
Image	
Max. Resolution	1920 × 1080
Main Stream	50Hz: 25fps (1920 × 1080, 1280 × 960, 1280 × 720) 60Hz: 30fps (1920 × 1080, 1280 × 960, 1280 × 720)
Sub Stream	50Hz: 25fps (640 × 480, 640 × 360, 320 × 240) 60Hz: 30fps (640 × 480, 640 × 360, 320 × 240)
Image Enhancement	BLC/3D DNR
Image Settings	Saturation, brightness, contrast and sharpness are adjustable via client software and web browser
Day/Night Switch	Auto/Scheduled/Day/Night
Network	

Alarm Trigger	Motion detection, video tampering, network disconnected, IP address conflict, illegal login, HDD error, HDD full
Network Storage	Support built-in microSD/SDHC/SDXC card (128G), local storage and NAS (NFS,SMB/CIFS), ANR
Protocols	TCP/IP, ICMP, HTTP, HTTPS, FTP, DHCP, DNS, DDNS, RTP, RTSP, RTCP, PPPoE, NTP, UPnP, SMTP, SNMP, IGMP, QoS, IPv6, UDP, Bonjour
General Function	One-key reset, anti-flicker, heartbeat, mirror, password protection, privacy mask, watermark, IP address filter
Firmware Version	V5.5.60
API	ONVIF(PROFILE S,PROFILE G), ISAPI
Simultaneous Live View	Up to 6 channels
User/Host	Up to 32 users 3 levels: Administrator, Operator and User
Client	iVMS-4200, Hik-Connect, iVMS-5200, iVMS-4500
Web Browser	IE8+, Chrome 31.0-44, Firefox 30.0-51, Safari 8.0+
Interface	
Communication Interface	1 RJ45 10M/100M self-adaptive Ethernet port
On-board Storage	Built-in microSD/SDHC/SDXC slot, up to 128 GB
Audio I/O	1 Built-in mic, mono sound
Video Out	No
Alarm I/O	No
Reset Button	Yes
Wi-Fi	
Wireless Standards	IEEE802.11b, 802.11g, 802.11n
Frequency Range	2.412 GHz - 2.472 GHz
Channel Bandwidth	20/40MHz
Protocols	802.11b: CCK, QPSK, BPSK, 802.11g/n: OFDM
Security	64/128-bit WEP, WPA/WPA2, WPA-PSK/WPA2-PSK, WPS
Transfer Rates	11b/g: 54Mbps, 11n: up to 150Mbps
Wireless Range	Up to 50 m (The performance varies based on actual environment)
Power Consumption	<20dBm
General	
Operating Conditions	-30 °C to +60 °C (-22 °F to +140 °F), Humidity 95% or less (non-condensing)
Power Supply	12 VDC ± 25%, Φ 5.5 mm coaxial plug power
Power Consumption and Current	12 VDC, 0.4 A, Max: 4.8W
Protection Level	IP66
Material	Front cover: plastic, camera body: metal
Dimensions	Camera: 69.7 mm × 67.9 mm × 171.4 mm (2.7" × 2.7" × 6.7") With package: 216 mm × 121 mm × 118 mm (8.5" × 4.8" × 4.6")
Weight	Camera: 372g (0.8lb) With package: 659g(1.5lb)

Available Model:

DS-2CD2021G1-IDW1(2.8/4 mm)

Dimensions

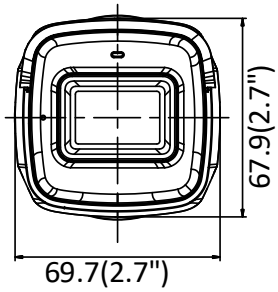

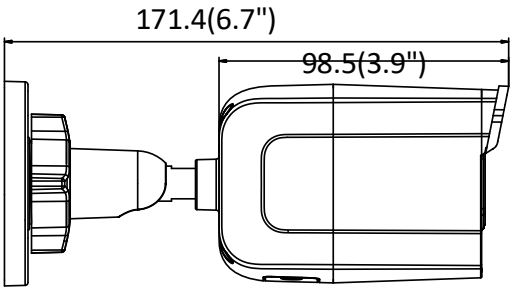

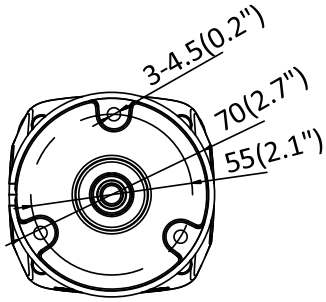

Unit: mm(inch)

Accessory

DS-1280ZJ-S

Junction Box

Distributed by

Headquarters
No.555 Qianmo Road, Binjiang District,
Hangzhou 310051, China
T +86-571-8807-5998
overseasbusiness@hikvision.com

Hikvision USA
T +1-909-895-0400
sales.usa@hikvision.com

Hikvision Europe
T +31-23-55-42-770
info.eu@hikvision.com

Hikvision Middle East
T +971-4-8816086
salesme@hikvision.com

Hikvision Russia
T +7-495-669-67-99
saleru@hikvision.com

Hikvision India
T +91-22-28469900
sales@pramahikvision.com

Hikvision Italy
T +39-0438-6902
info.it@hikvision.com

Hikvision France
T +33(0)1-85-330-450
info.fr@hikvision.com

Hikvision Spain
T +34-91-737-16-55
info.es@hikvision.com

Hikvision Poland
T +48-22-460-01-50
poland@hikvision.com

Hikvision UK
T +01628-902140
support.uk@hikvision.com

Hikvision Singapore
T +65-6684-4718
sg@hikvision.com

Hikvision Oceania
T +61-2-8599-4233
salesau@hikvision.com

Hikvision Canada
T +1-909-895-0400
sales.usa@hikvision.com

Hikvision Korea
T +82-31-731-8841
sales.korea@hikvision.com

Hikvision Brazil
T +55 11 3318-0050
Latam.support@hikvision.com

Hikvision Africa
T +27 (10) 0351172
sale.africa@hikvision.com

Hikvision Hong Kong
T +852-2151-1761

05056020180518

© Hikvision Digital Technology Co., Ltd. 2017 | Data subject to change without notice |